inova Dispenser Installation Instructions

Parts and Tools



In the Box:
Dispenser
Mounting Hardware
Lockout Key
ID Tab (pre-installed)

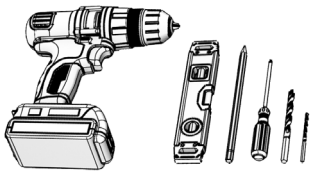

Recommended Tools:
Drill
1/4" Drill Bit
Pencil
Phillips Screwdriver
Small Level

ADA Guidelines for Mounting Height

Unobstructed reach: no more than 48" from floor

Obstructed reach: 48" max for 20" sink depth and 44" max for 25" sink depth

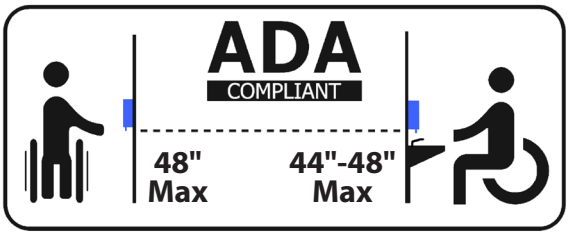

Product ID Tab

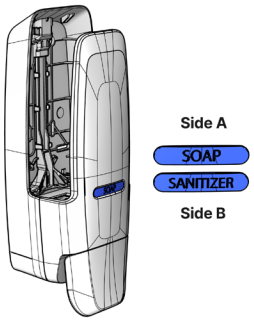

Product ID tab is set to *Soap*, change to *Sanitizer* using dispenser key

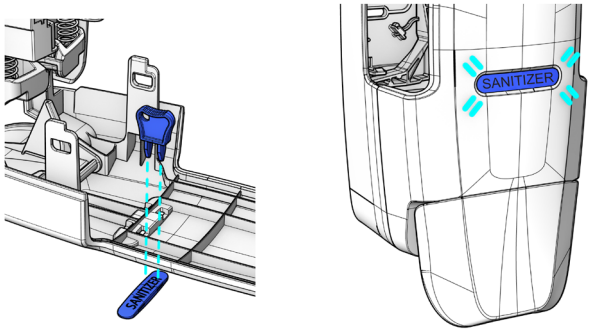

Open dispenser and press ID tab with key until it pops out, flip over and snap into place

Mounting Prep

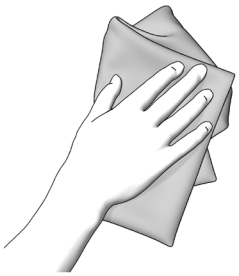

Clean mounting surface with dry cloth

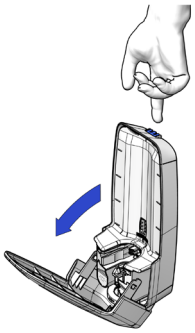

Push top button to open dispenser

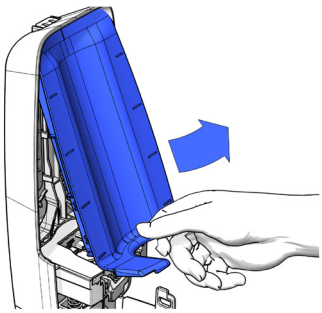

Press up and pull out the inner panel

Mounting with Screws (recommended)

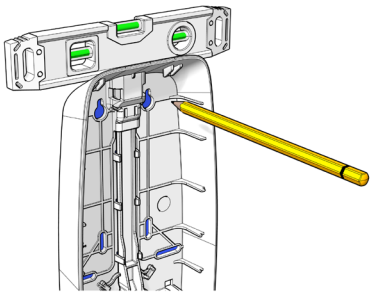

Determine hanging height, level and mark screw holes

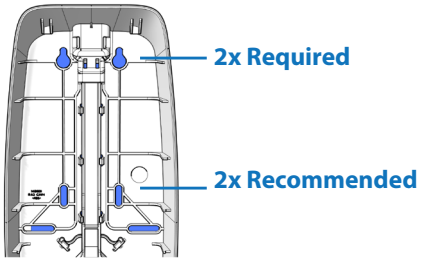

Two screws are required; two additional screws are recommended

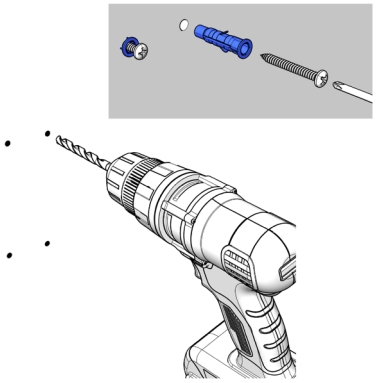

Drill holes using 1/4" drill bit, set inserts and drive screws

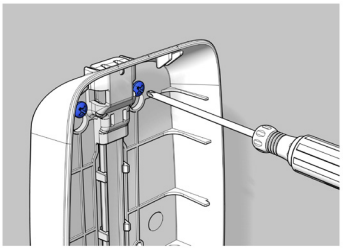

Slide dispenser onto screws and tighten

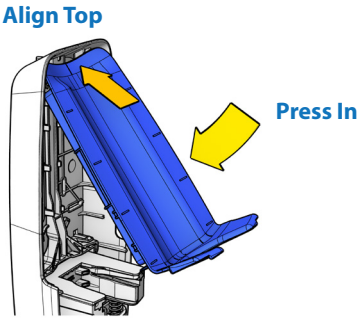

Reinsert inner panel

Mounting with Adhesive

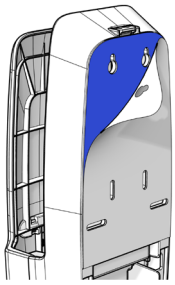

Remove adhesive backing

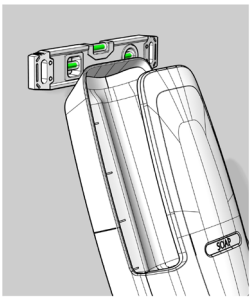

Level top edge

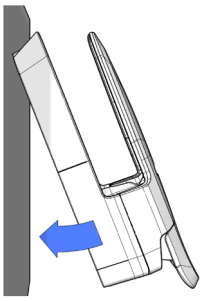

Pivot down

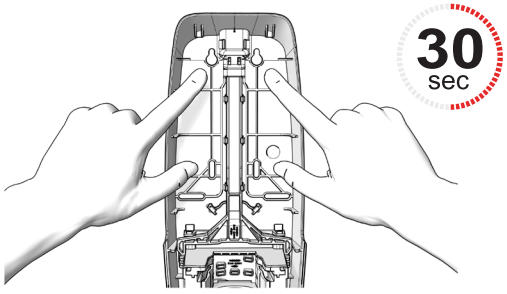

Press firmly for 30 seconds; reinsert inner panel

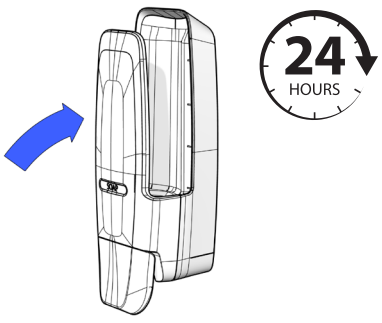

Close dispenser door and wait 24 hours to load product cartridge (recommended)

Loading Batteries (automatic only)

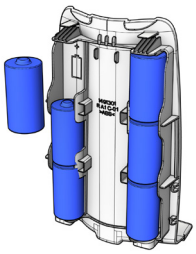

Load six C batteries following the directions on the back side of inner panel

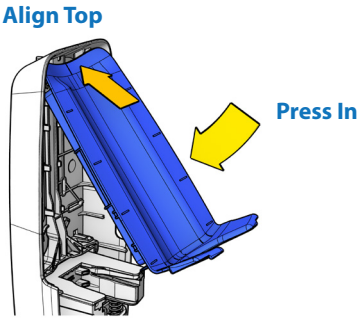

Reinsert inner panel

Filling/Refilling

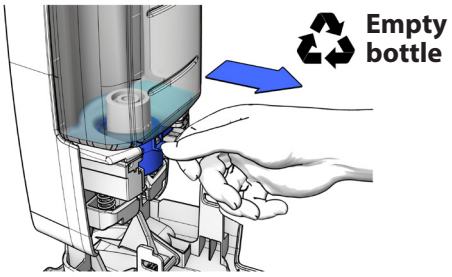

Use pull tab or grasp near bottom of bottle to remove; recycle empty bottle

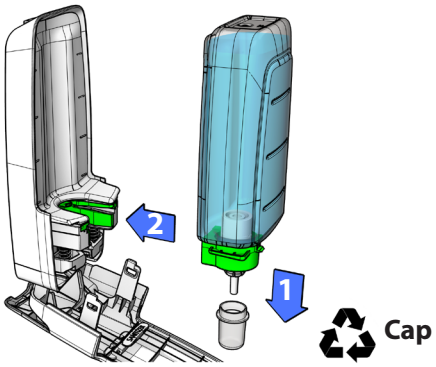

Remove clear overcap from cartridge then slide into fitment

Assemble & Test

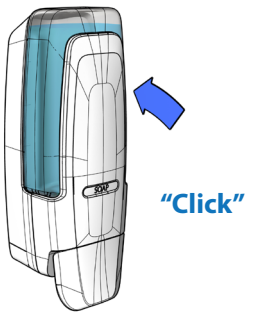

Close the dispenser door until it clicks to confirm it is fully closed

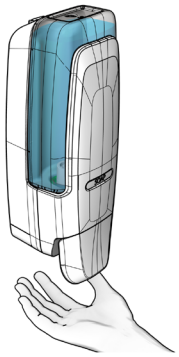

Activate 5 times to prime pump for use

Dispenser Button Lockout



Key

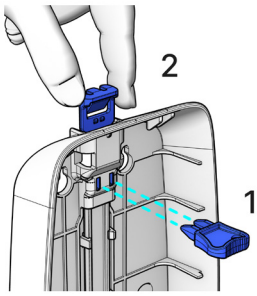

Open dispenser, remove inner panel, use key to remove the push button

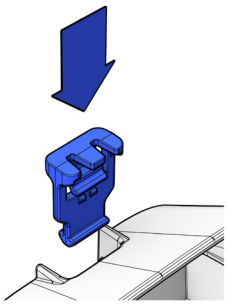

Flip push button around then reinsert in the locked position

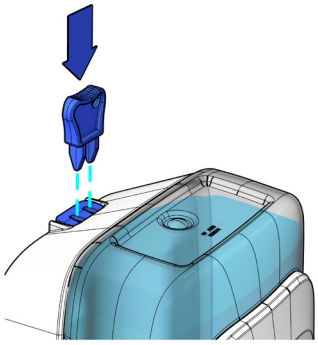

Use key to open

Drip Tray (optional)

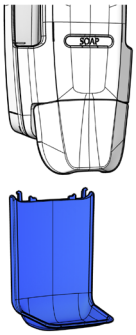

Attach drip tray to back of dispenser prior to hanging

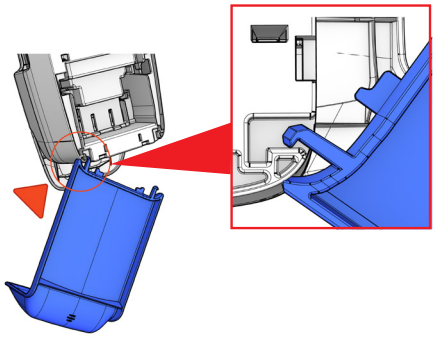

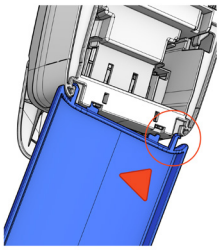

Turn dispenser over, hook one side of drip tray into place then the other, pressing firmly

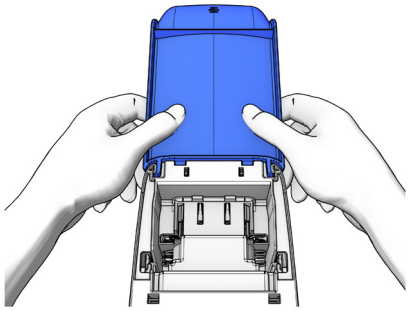

To remove: grab the sides of drip tray, then bend up and away from dispenser